Data Sheet

Itemnumber....: 5540801309

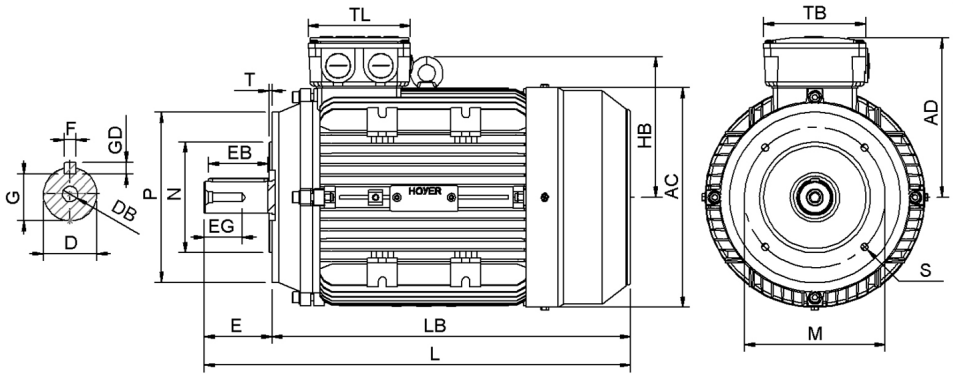

AC = 159	**DB = M6**	**EG = 16**	**GD = 6**	**M = 100**	**S = 4-M6**	**TL = 100**
AD = 126	**E = 40**	**F = 6**	**L = 298**	**N = 80**	**T = 3**	
D = 19	**EB = 32**	**G = 15,50**	**LB = 258**	**P = 120**	**TB = 100**	

Version
Type.....: HMA3 80 2-4
Design.....: Induction motor
Standard series.....: IEC 60034
Phase / Voltage range.....: 3~ / Low

Electrical design
Efficiency.....: IE3
Pole.....: 4
Power at 50 Hz (kW).....: 0,75
Hz.....: 50
Voltage.....: 230VD/400VY
Winding voltage.....: 230VD/400VY 50 Hz
Power output (kW).....: 0,75
Duty.....: S1
Insulation class.....: F
Temperature rise.....: B

Motor protection
Thermal protection main....: PTC 3x 155 dgr
Thermal protection second..: None
Space heater.....: None
Temperature detector.....: No
SPM.....: No
IR wire.....: No
Tropical insulation.....: No

Explosion protection
According to.....: None
Type of protection.....: None

General
Direction of rotation.....: CW
Painting.....: RAL 9005
Nameplate.....: Multivoltage
Special packing.....: No
Special requirements.....: No

Mechanical design
Frame size.....: 80
Mounting.....: B14
B14 M measure.....: 100
Rain cap.....: No
Protection class.....: IP55
Cooling method.....: IC411/TEFC
External grounding.....: Yes
Drain hole.....: Yes
Frame material.....: Aluminium
Material approval.....: None
Shaft.....: IEC standard
Key.....: Closed key
Balancing.....: Half key balancing
Vibration class.....: Grade-A
Weight (kg).....: 11,6

Environment condition
Ambient temp. min. (°C)..: -20
Ambient temp. max. (°C)..: 40
Altitude (mtr up to).....: 1000

Bearing
DE Bearing.....: 6204-ZZ/C3
NDE Bearing.....: 6204-ZZ/C3
Fixed bearing.....: DE

Terminal box
Tbox position.....: Top
Cable entry direction.....: Right (from DE)
Cable entry
Main.....: 2 x M20x1,5
Plastic blindcaps
Accessory.....: NA
Terminal board thread.....: 6-M4

Test values
Rotor inertia (kgm²).....: 0,0026
Noise level (dB(A)).....: 49
No load current (A).....: 1,14
Winding resist. (ohm).....: 6,67
Starting time (sec.).....: 0,03
Temp. rise winding (K).....: 49
Temp. rise surface (K).....: 27

Rated power (kW)	0,68	
Frequency (Hz)	60	
Voltage (V)	220	380
Connection	D	Y
Full load current (A) ...	3,00	1,72
Speed (rpm)	1730	
Power factor cos(phi) ...	0,76	
Efficiency, 100/75/50 (%) :	80,8/ 81,2 /79,0	
Ist/In	5,45	
Full load torque (Nm) ...	3,75	
Tst/Tn	2,42	
Tmax/Tn	2,70	
Duty	S1	
Ambient temp. (°C)	40	

Data are not binding. Hoyer reserves the right to implement changes without notice. The extent of data are not equivalent to nameplate on the motors.